http://houdelier.com

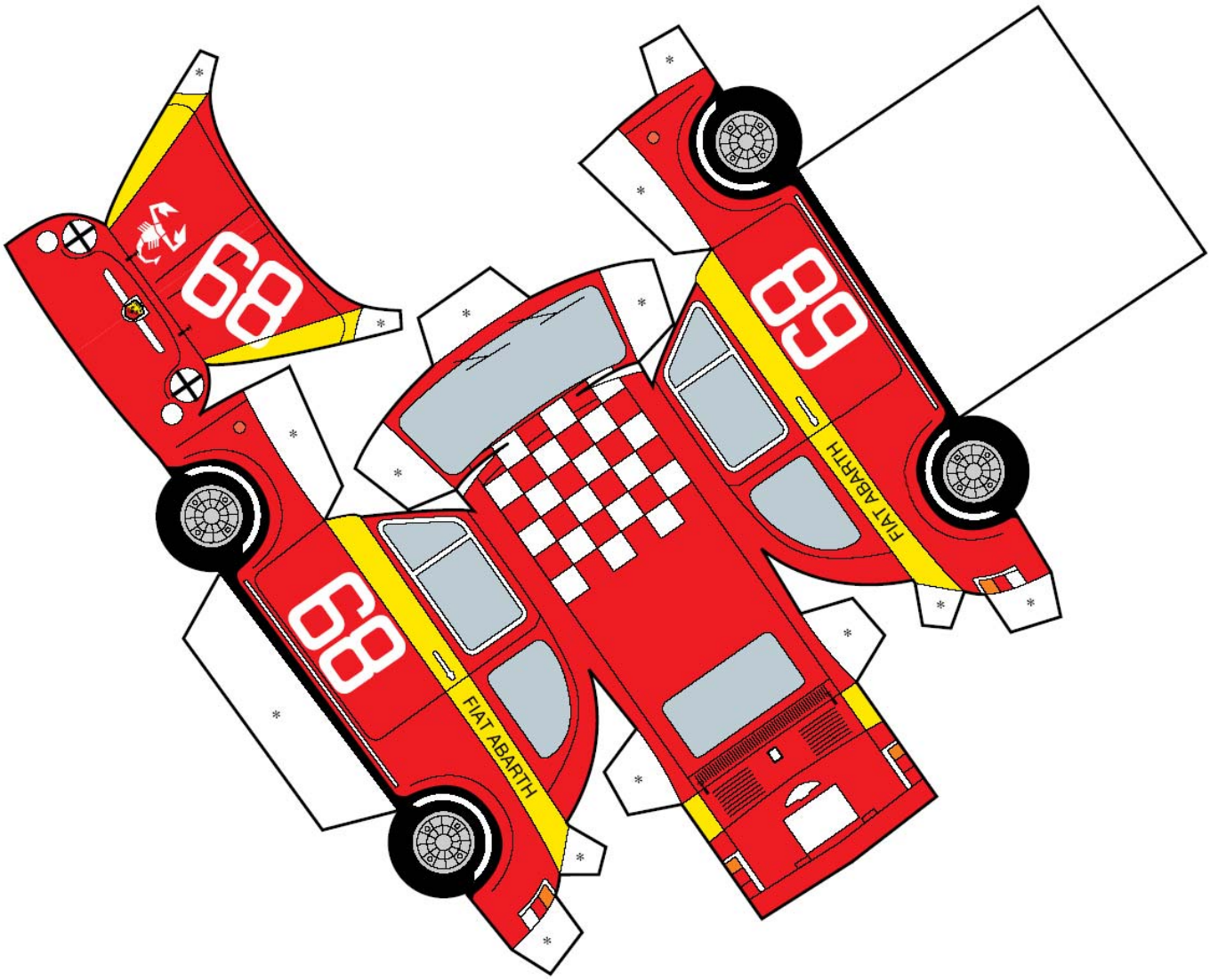

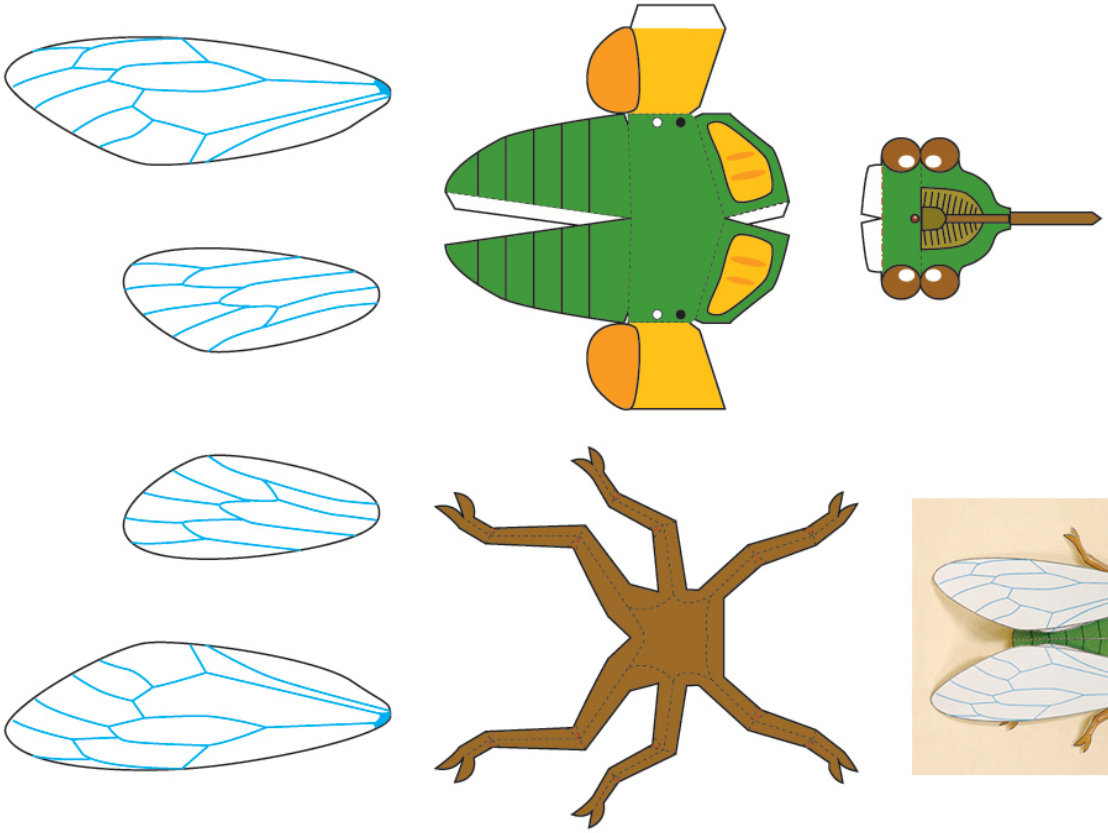

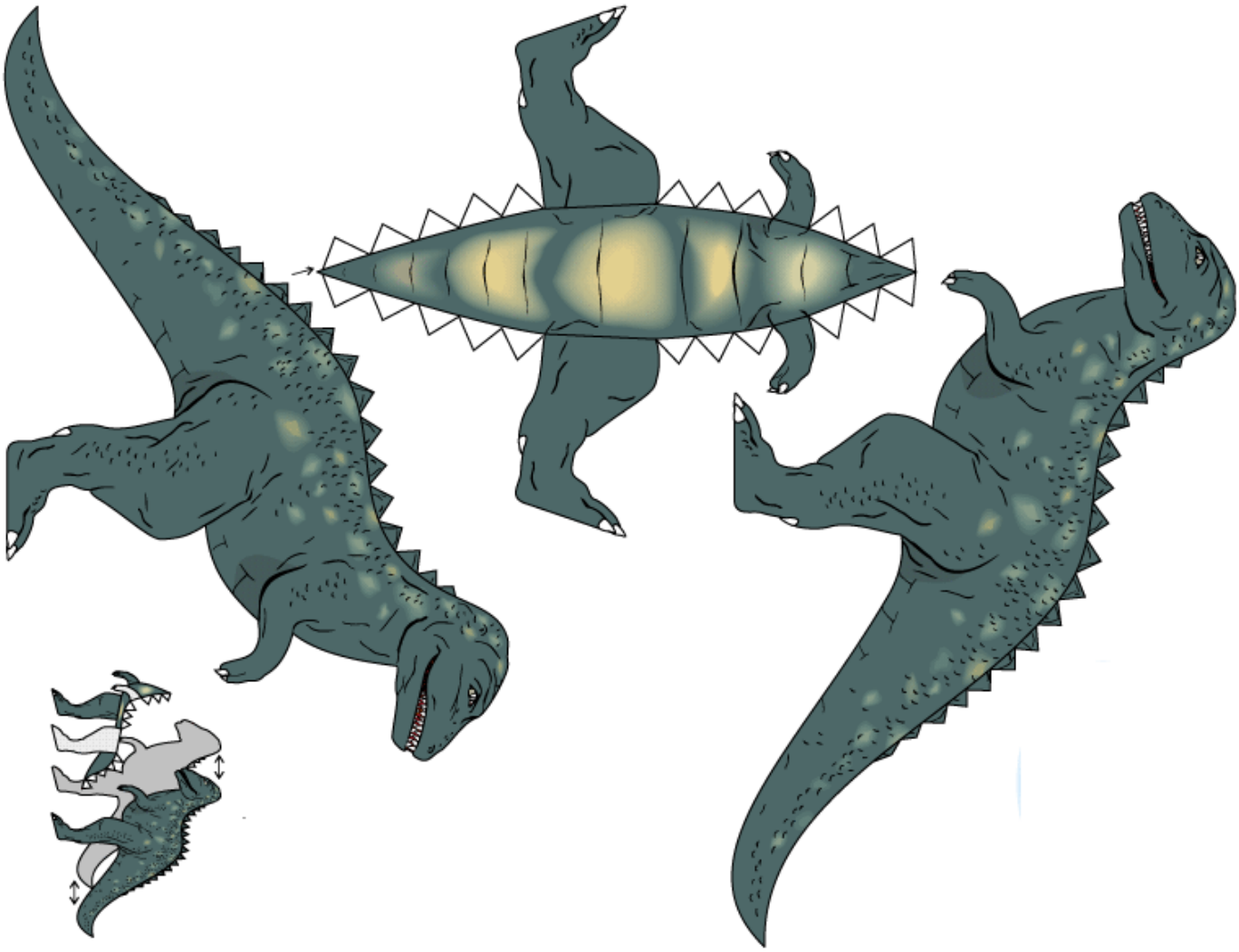

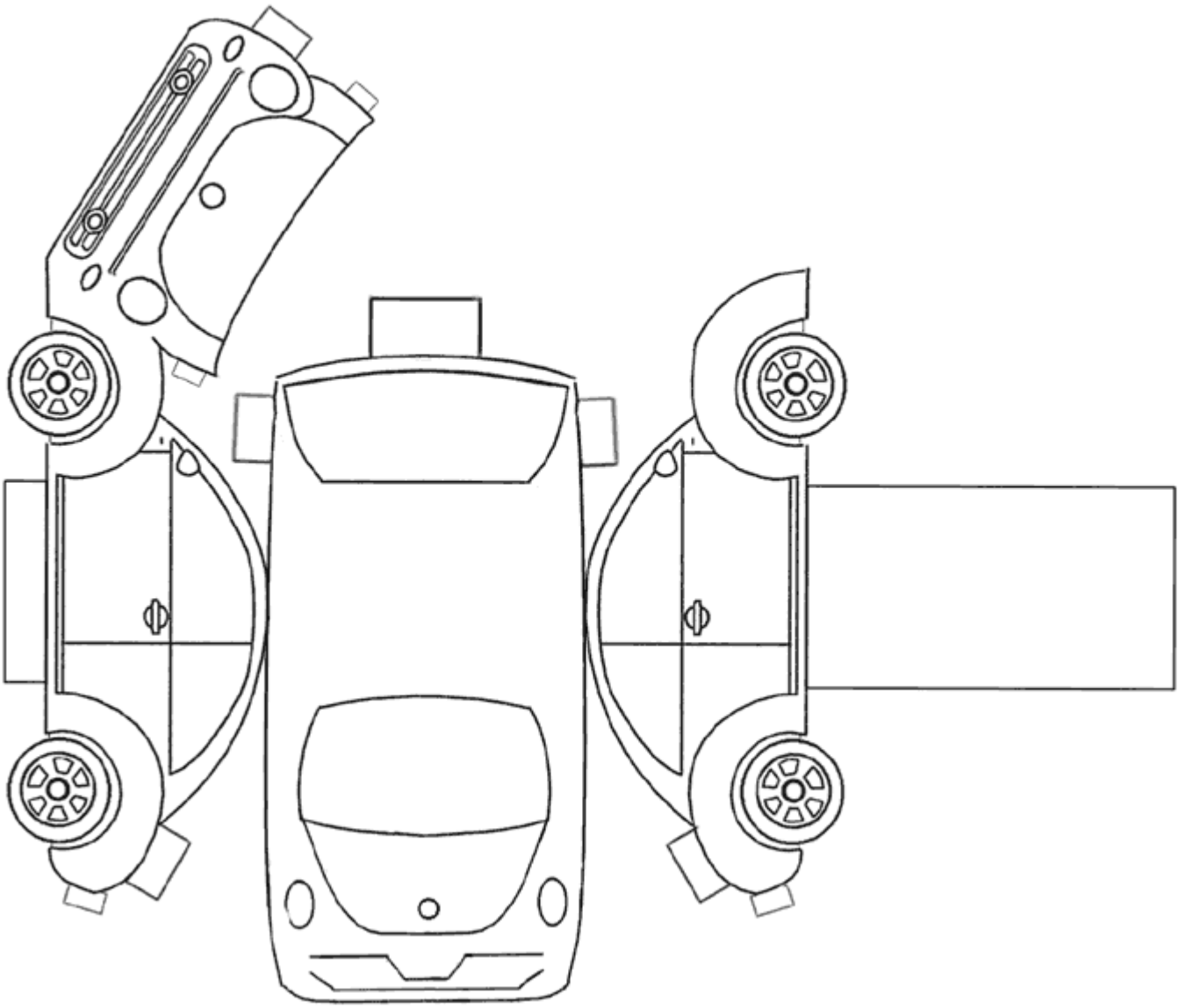

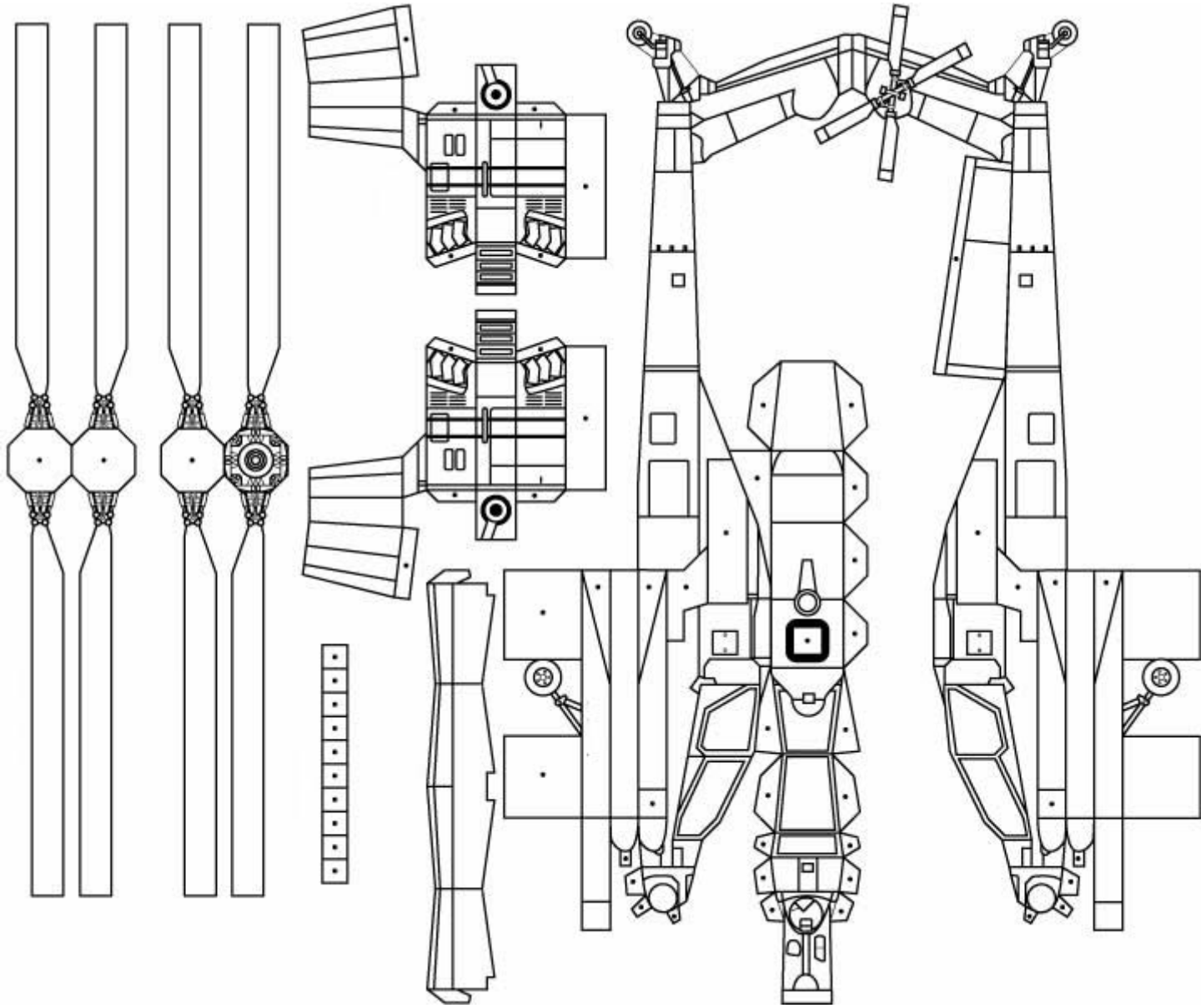

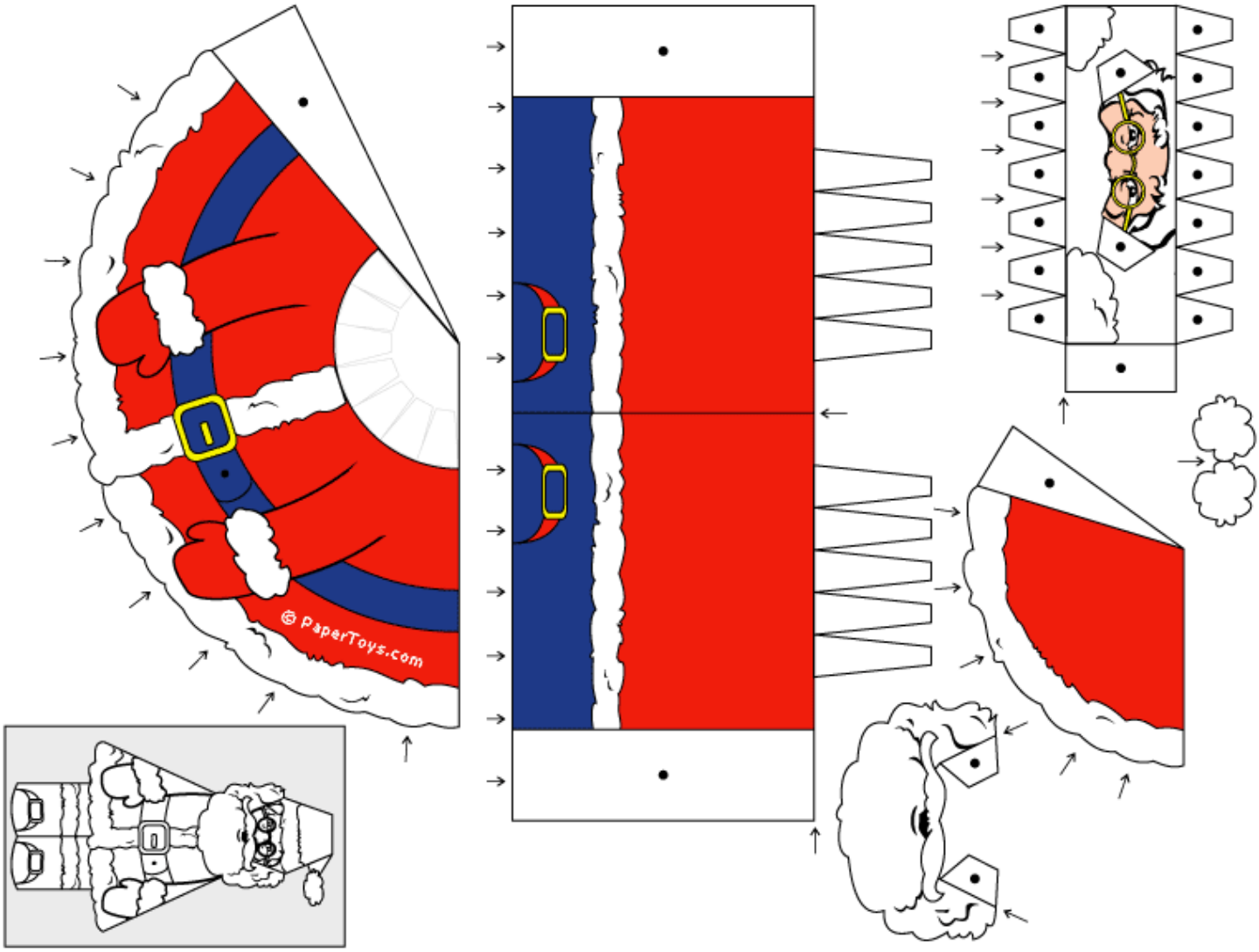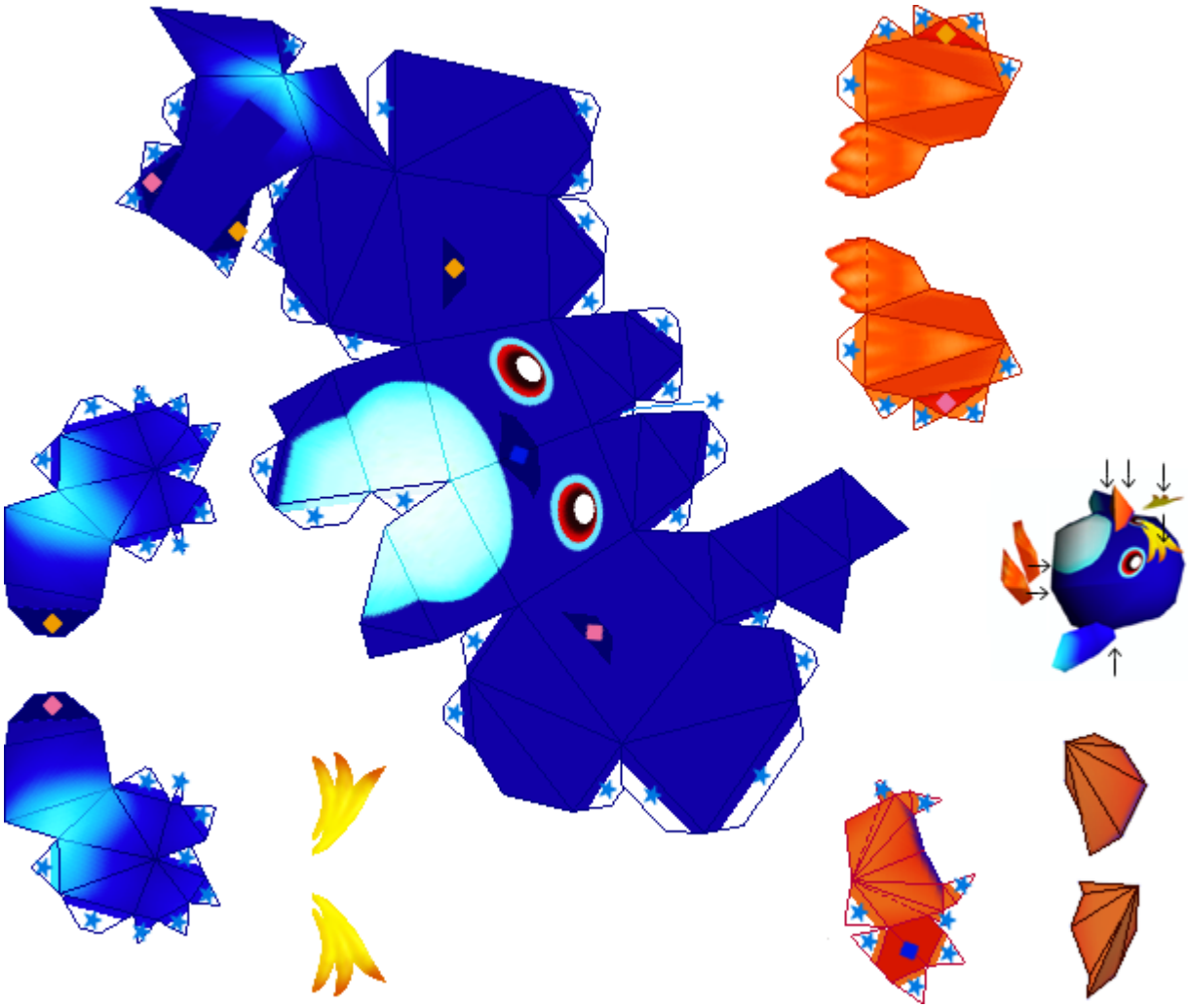
© PaperToys.com